Miter Fold Library

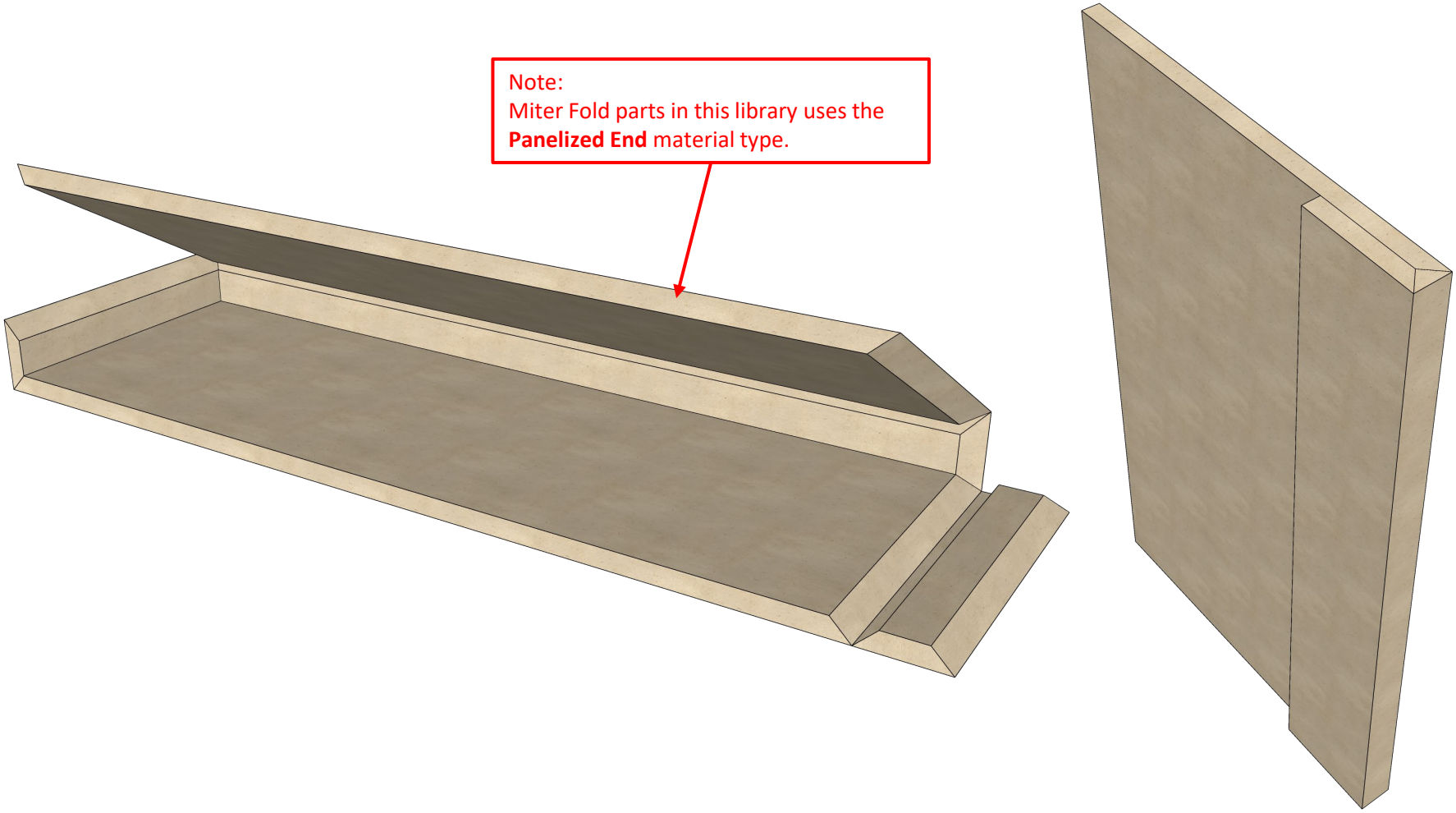

The Miter Fold Product Library is a custom library that will aid in the production of panels that will fold into various shapes. A 90° V-Bit is typically used in the toolpaths that product these miters.

Understanding Miter Fold Terms

Miter Folds will be referred to by “Letters” which are used to describe the general shape that they will form once folded. Use the Glossary below to see the shapes available. In certain products, there may be User Added Parameters used to add additional options to these products, for example the amount it will return.

Plan View

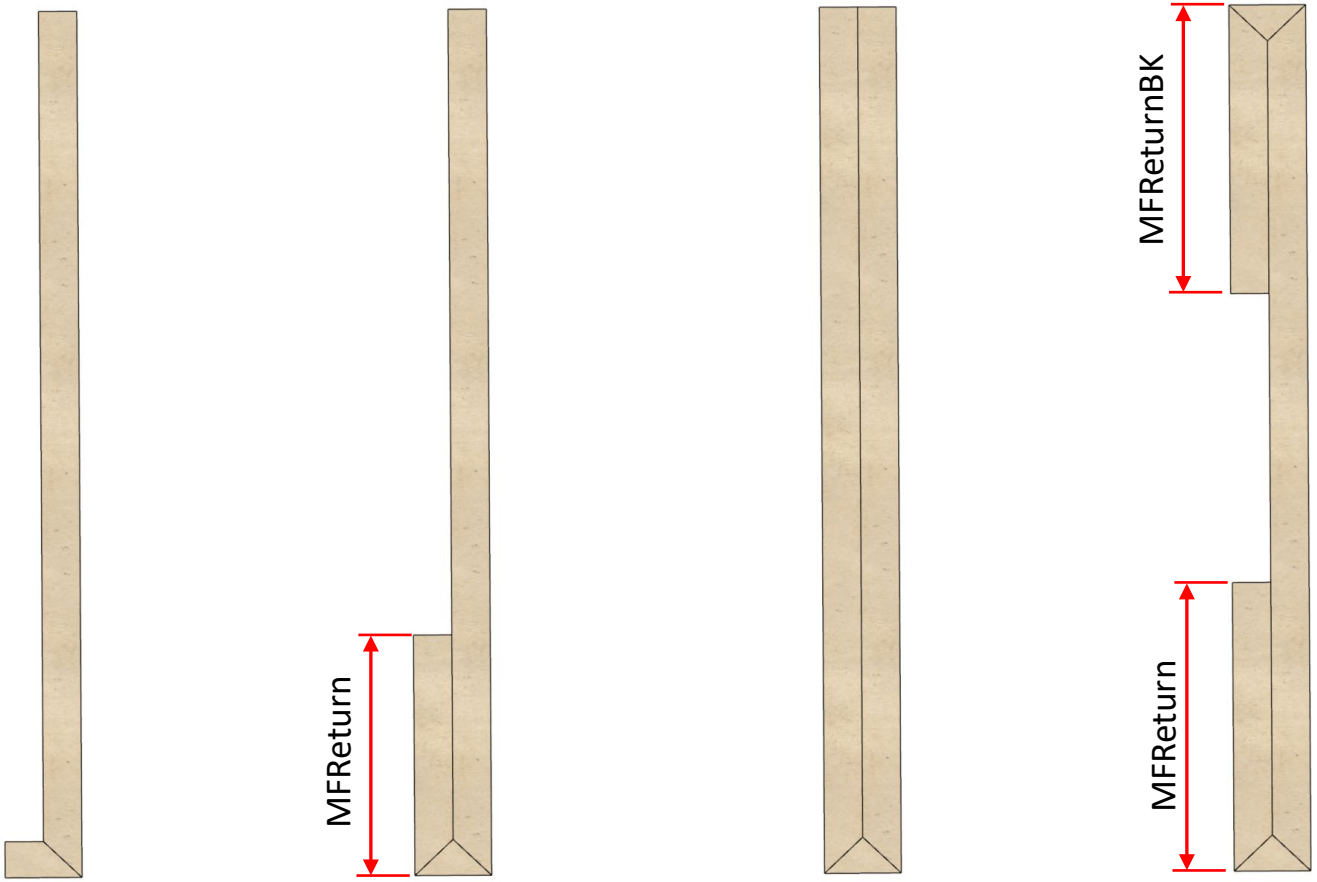

“L” Shape **“J” Shape** **“U” Shape** **“C” Shape**

Tool Selection

Miter Folds will use a 90° V-Bit to create “Miters” that will allow the material to be folded into shape.

By Default, the 90° Sharp Corner Tool from the Mozaik Tool Library will be used. Users may want to change this tool. If so, the user will need to manually select another tool for every toolpath in each part in the library.

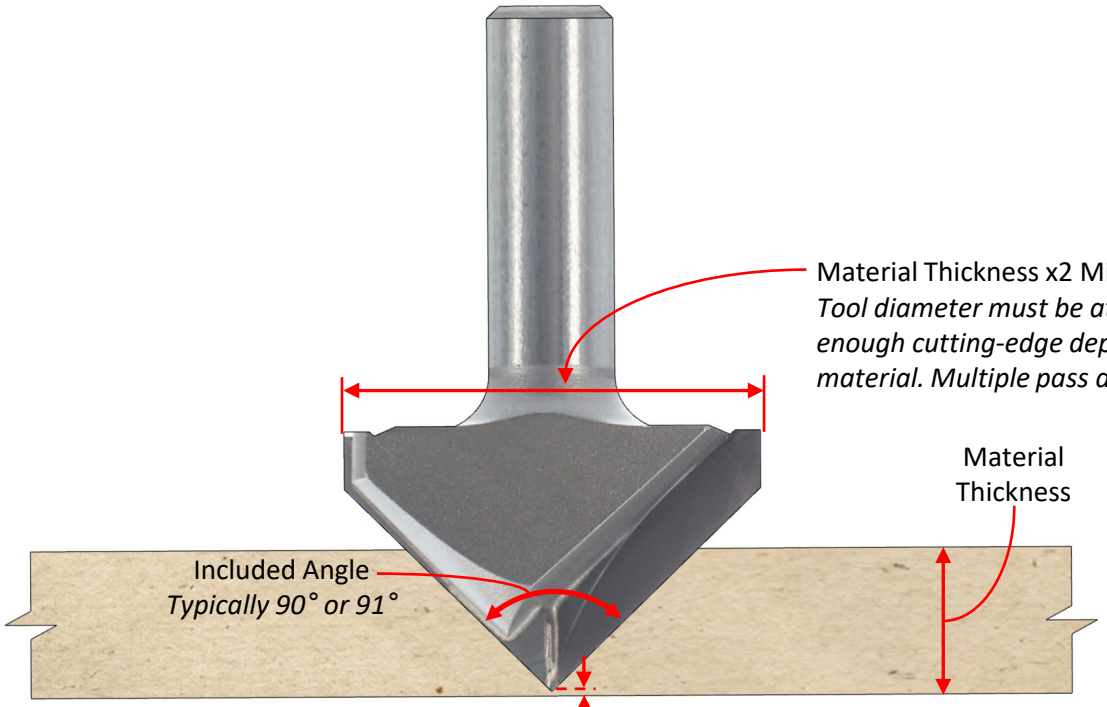

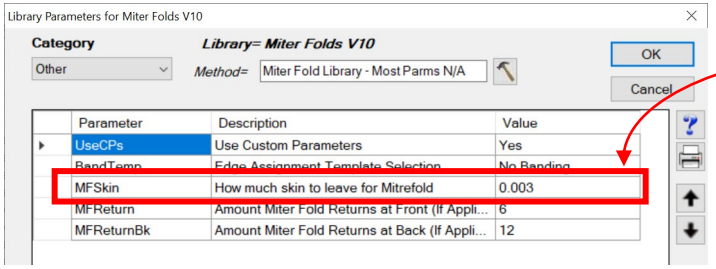

MFSkin *User Added Parameter*

For certain applications or materials, use the MFSkin parameter to add a “Skin” to the Miter Folds. **Set this parameter to Zero to cut through.**